BORDERLIGHTS

Catalog Numbers

SKY-CYC-01 SKY-CYC-03
SKY-CYC-02H SKY-CYC-04
SKY-CYC-02V



Fixture Type:

A lightweight, wide spread, luminaire designed to provide and even wash of light on cycloramas; the four light sky cyc, when mounted 8 feet from the cyc, 12 feet on center will typically provide better than 1.3 to 1 uniformity between luminaires with a minimum of 176 footcandles at the bottom of a 20' cyc. Available in many configurations, the SKY-CYC is ideally suited for use in theatres and television studios as a compact, lightweight means of lighting large cycloramas from above.

Specifications subject to change without notice

1500 WATTS
SKY-CYC
Features

- Die-cast and sheet steel construction
- Broad even distribution
- High efficiency reflector
- Wide spacing – 12' O.C. typical
- Multiple mounting configurations
- Safety screen(s) included
- U.L. and c.U.L. listed for 1500 watts
- Made in the USA

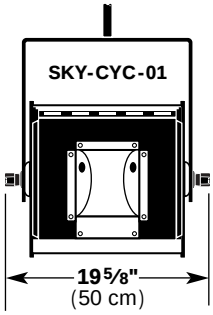

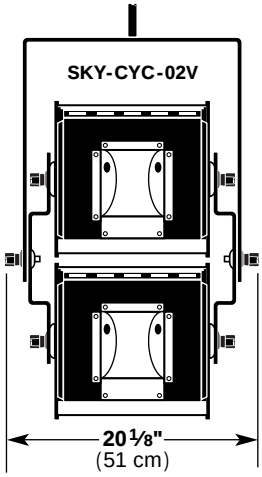

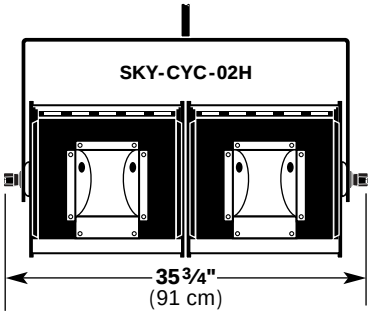

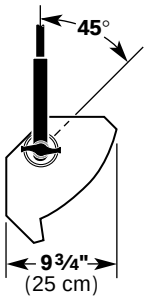

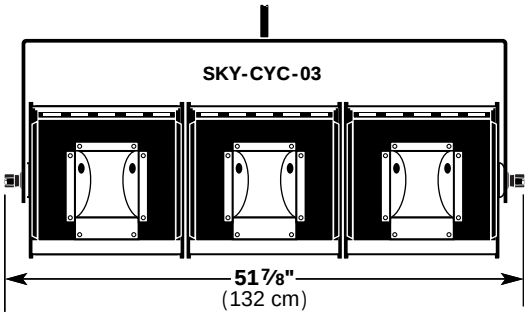

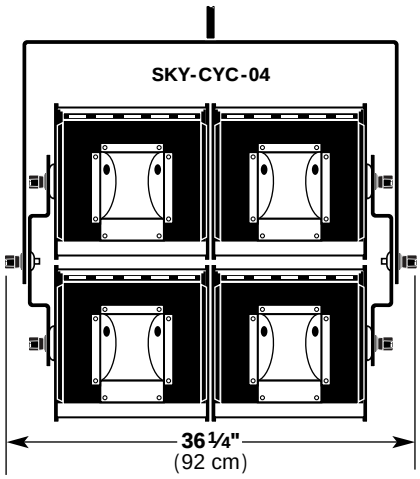

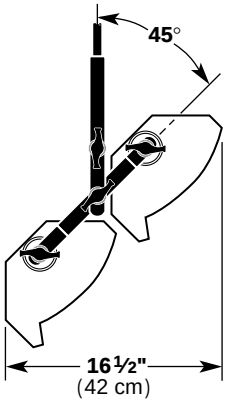

ALTMAN Lighting, Inc.
BRINGING IMAGINATION TO LIGHT

1500 WATTS SKY-CYC

Catalog Numbers
SKY-CYC-01 SKY-CYC-03
SKY-CYC-02H SKY-CYC-04
SKY-CYC-02V

Specifications

Housing: Sheet aluminum and die-cast and aluminum construction.

Materials: Construction employs all corrosion-resistant materials and hardware.

Rating: 120 volts AC/DC operation, 12.5/6.25 amps, 1500 watts maximum per section.

Socket: Recessed single contact, two provided per section. Tool free relamping.

Cable: 36" Teflon leads encased in black fiberglass sleeving, one set of leads provided per section.

Yoke: 1/8"x2" extruded aluminum channel with dual handles.

Ganging Irons: Rigid flat steel with four handles.

Reflector: Peened specular aluminum.

Safety Screens: Stainless steel, one provided with each section.

Finish: Black epoxy sandtex, electrostatic application.

Weight: Approx; 12 lbs. (5.4 kg.) for SKY-CYC-01.
Approx; 22 lbs. (9.9 kg.) for SKY-CYC-02H.
Approx; 37 lbs. (16.7 kg.) for SKY-CYC-02V.
Approx; 28 lbs. (12.6 kg.) for SKY-CYC-03.
Approx; 52 lbs. (23.4 kg.) for SKY-CYC-04.

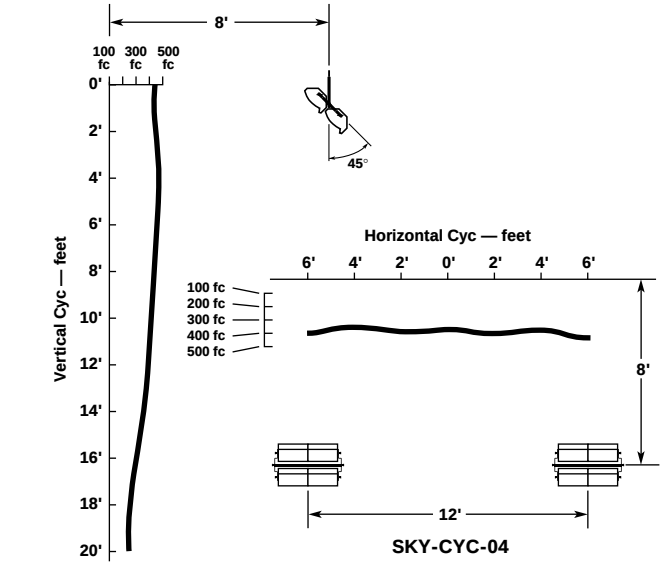

SKY-CYC-04

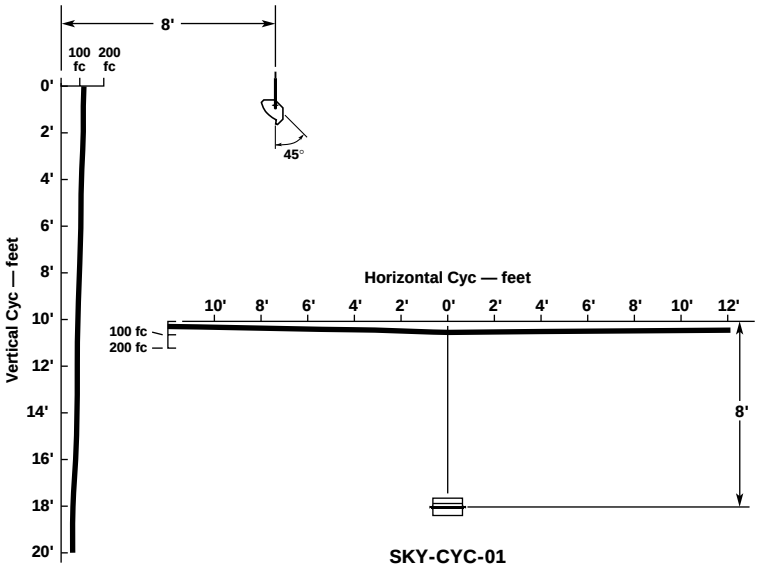

SKY-CYC-01

ACCESSORIES Supplied with Luminaire	
510	Malleable Iron Pipe Clamp with 1 & 2 section units
510-HD	Heavy Duty Malleable Iron Pipe Clamp with 3 & 4 section units
SC	Safety Cable with Spring Clip

ADDITIONAL ACCESSORIES	
SC-CF	Color Frame

SKC-CYC PERFORMANCE CHART WITH FDB LAMP

Fixture Type	Candlepower (Candela)	Beam Angle (Degrees°) H	V	Field Angle (Degrees°) H	V	Efficiency (%)
SKY-CYC-01	10,924	100° x	105°	108° x	107°	62.4

LAMP DATA

Watts	ANSI Code	Finish	Color Temp (°K)	Lumens	Volts	Rated Life (Hours)	Correction Factor
1500	FDB	Clear	3200	41,200	120	400	1.0
1500	FGT	Frost	3200	40,200	120	400	—
1000	FFT	Clear	3200	26,400	120	400	.64
1000	FGV	Frost	3200	25,700	120	400	—

ALTMAN Lighting, Inc.
BRINGING IMAGINATION TO LIGHT

57 Alexander Street, Yonkers, NY 10701 Tel: 914.476.7987, 212.569.7777, Fax: 914.963.7304, Toll free: 800.4.ALTMAN or
Visit our website at http://www.altmanltg.com © 2003 Altman Stage Lighting Company, Inc.
Altman Lighting, Inc. is a subsidiary of Altman Stage Lighting Company, Inc.

SKY CYC FIXTURE

Catalog No:	Assy No:	Description:	Revision:	Section:
SKY-CYC		SKY CYC FIXTURE	C	7.9

Color Code: = Object = MFG. Number-Not for Sale = Obsolete = Part Number/Note **Bold** = Sub-Assembly

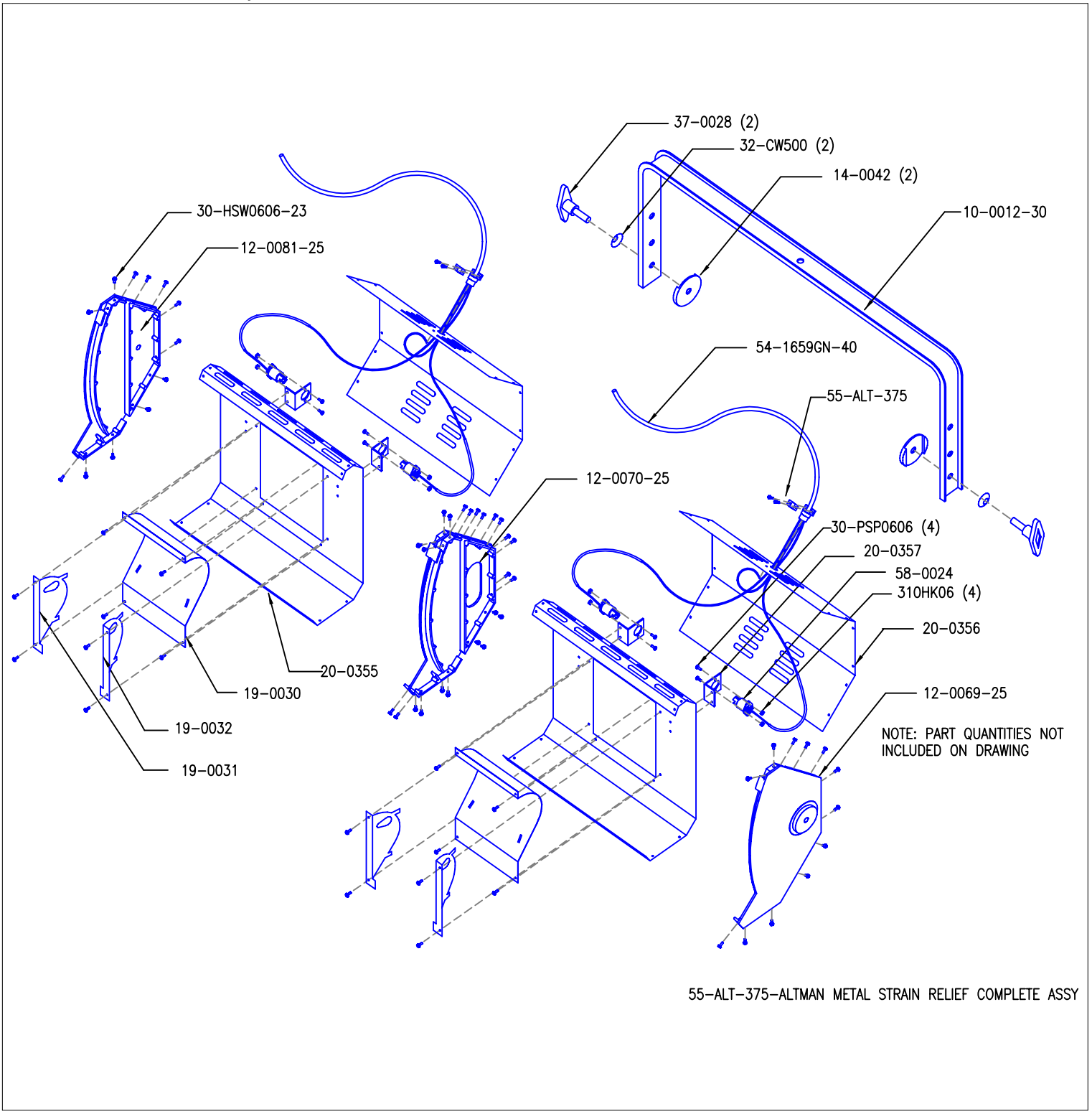

ALTMAN

Altman Stage Lighting Co. Inc.
57 Alexander St., Yonkers, NY, 10701
Ph: (914) 476-7987 Fax: (914) 963-7304
http://www.altmanltg.com

Copyright© 1998-2001 Altman Stage Lighting Co., Inc. R.A. Pujol